PRODUCT SHEET

Snap Frame Standard 50x70 cm Mitred Corners 25 mm Wood

KR50x70G25LB

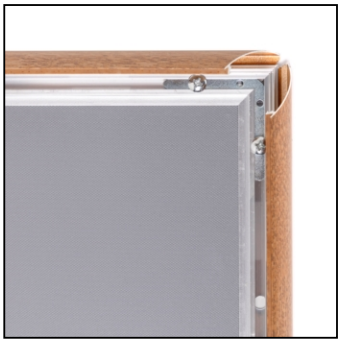

- **Cost effective, elegant display solution for 50x70cm posters**
- **Quick poster replacement**
- **Over 20 variations available**

PRODUCT SHEET

Snap Frame Standard 50x70 cm Mitred Corners 25 mm Wood

KR50x70G25LB

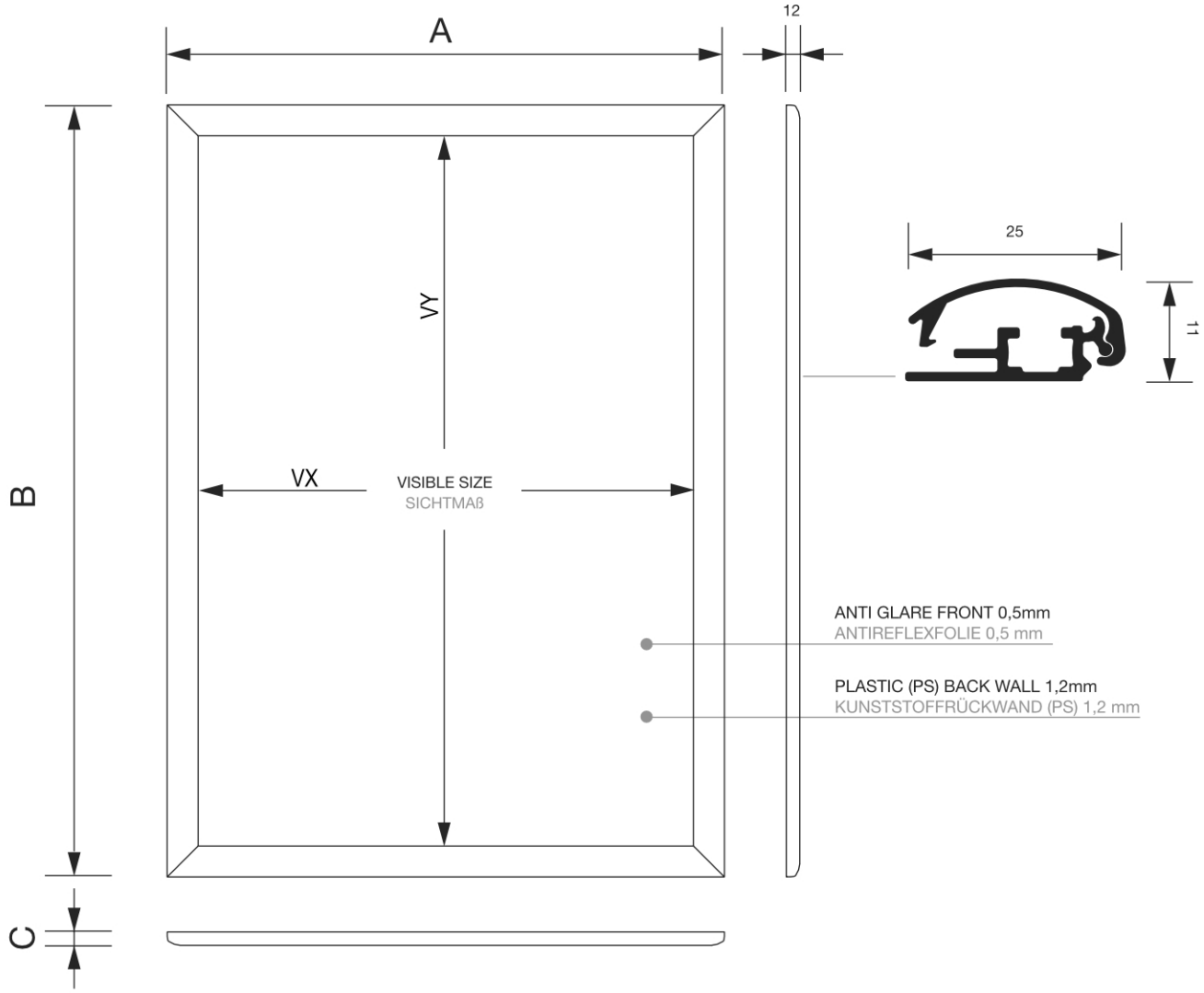

BACK VIEW
RÜCKANSICHT

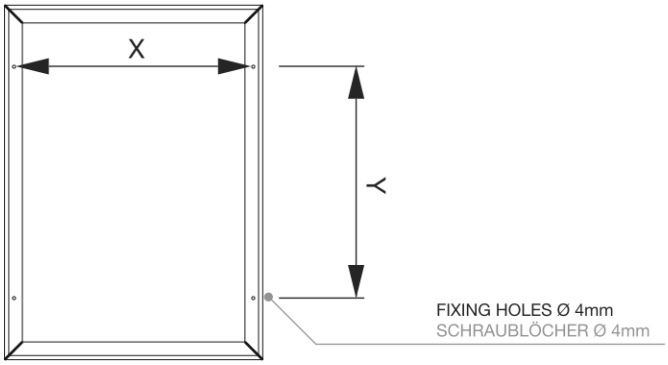

ACCESSORIES
ZUBEHÖR

(SOSSET)
SET OF SCREWS
SCHRAUBENSET

(KRHOOK)
HANGING HOOKS
HAKEN ZUM ABHÄNGEN

(HSKR)
HANGING SET
HÄNGESET

PRODUCT SHEET

Snap Frame Standard 50x70 cm Mitred Corners 25 mm Wood

KR50x70G25LB

GENERAL INFO

SKU	Sizes (mm) (A x B x C)	Format (mm)	Visible size (mm) (VXxVY)	Hole spacing (mm) (XxY)
KR50x70G25LB	531 x 731 x 11	500 x 700 mm	481 x 681 mm	511x 442 mm

Orientation	Weight (kg)
Vertical	1,29

PACKAGING INFORMATION

Packaging unit 1 (mm)	Packaging unit 2 (mm)	Packaging unit 3 (mm)
740 x 540 x 20	-	-

Palette number of pieces	Palette weight (kg)	Palette type
194	356	EUR

ADDITIONAL INFORMATION

Product certifications	EAN
No	8596052191411

SIZE GUIDE

Snap Frame Standard 50x70 cm Mitred Corners 25 mm Wood
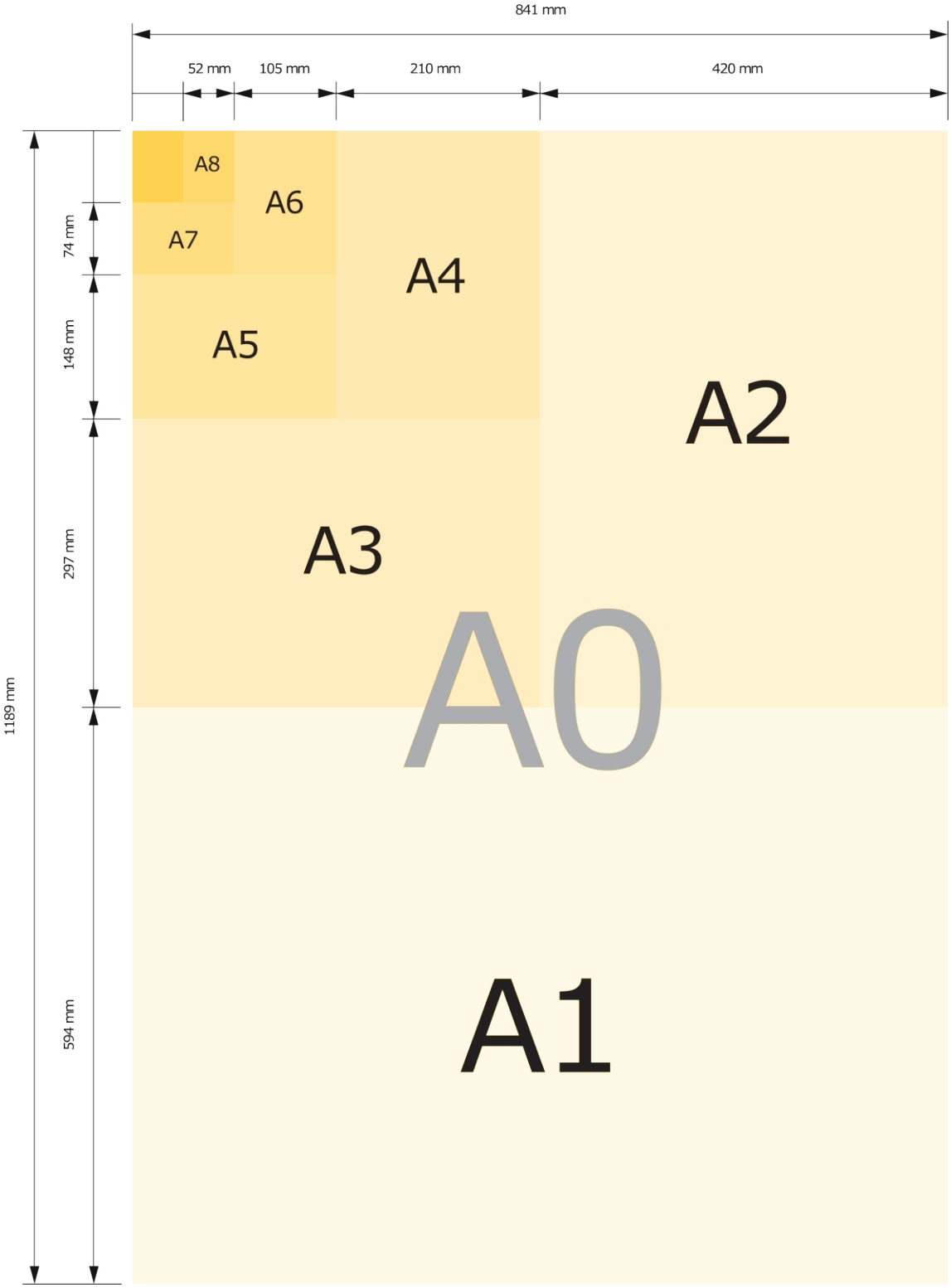
KR50x70G25LB